Advanced Analog Building Blocks
Reference Circuits

Albert Comerma (PI)
(comerma@physi.uni-heidelberg.de)

UNIVERSITÄT
HEIDELBERG
ZUKUNFT
SEIT 1386

Course web

SoSe 2017

Voltage references

Temperature and power-supply independent references.

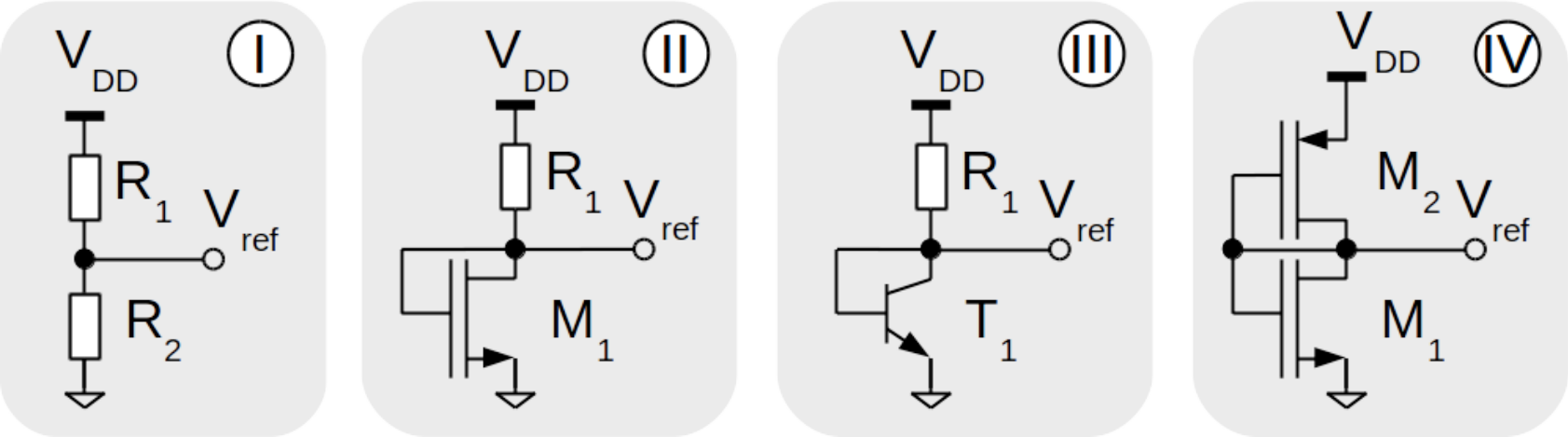

I. Passive reference
II. Resistor-MOS reference
III. Bipolar reference
IV. MOS reference

Important parameters:

- Power supply Sensitivity:
  $S_{V_{DD}}^{V_{ref}} = \frac{V_{DD}}{V_{ref}} \frac{\partial V_{ref}}{\partial V_{DD}}$
  $\frac{\triangle V_{ref}}{V_{ref}} = S_{V_{DD}}^{V_{ref}} \left(\frac{\triangle V_{DD}}{V_{DD}} \right)$
- Temperature coeficient:
  $TC = \frac{1}{V_{ref}} \frac{\partial V_{ref}}{\partial T} = \frac{1}{T} S_T^{V_{ref}} \left(\frac{ppm}{^\circ C} \right)$

Simple references

I. Passive refrence

$$V_{ref} = V_{DD}\frac{R_2}{R_1+R_2}$$
$$S_{V_{DD}}^{V_{ref}} = \frac{V_{DD}}{V_{ref}}\frac{\partial V_{ref}}{\partial V_{DD}} = 1$$
$$TC = \frac{1}{V_{ref}}\frac{\partial V_{ref}}{\partial T} = \frac{R_1}{R_1+R_2}\left(TC(R_2) - TC(R_1)\right)$$
(supposed $\frac{\partial V_{DD}}{\partial T} = 0$)

If $TC(R_1) = TC(R_2) \rightarrow TC = 0$, same type of resistors.

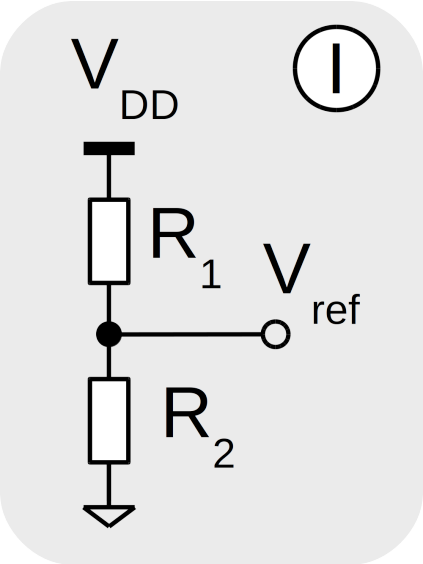

II. MOS refrence

$$V_{ref} = V_{GS} = V_{TH} + \sqrt{\frac{V_{DD}}{\beta R_1}} \text{ (supposed } V_{DD} >> V_{ref}\text{)}$$
$$S_{V_{DD}}^{V_{ref}} \approx \frac{V_{DD}}{2V_{ref}\sqrt{\beta R_1(V_{DD}-V_{ref})}}$$
$$\frac{\partial V_{ref}}{\partial T} = \frac{\partial V_{T0}}{\partial T} - \frac{1}{2}\sqrt{\frac{2nV_{DD}}{\beta R_1}}\left(\frac{1}{R_1}\frac{\partial R_1}{\partial T} + \frac{1}{\beta}\frac{\partial \beta}{\partial T}\right)$$
$$TC = \frac{V_{T0}}{V_{ref}}TC(V_{T0}) - \frac{1}{2V_{ref}}\sqrt{\frac{2nV_{DD}}{\beta R_1}}\left(TC(R_1) - TC(\beta)\right)$$

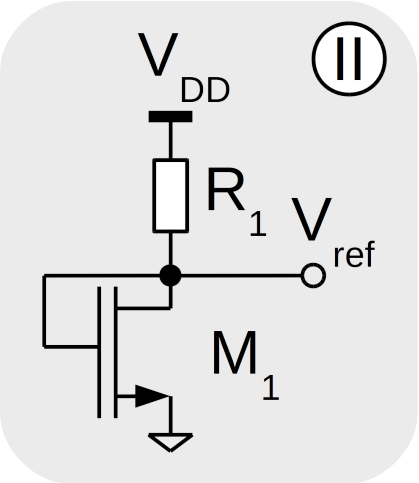

Simple references

III. Bipolar refrence

$$V_{ref} \approx V_T ln\left(\frac{V_{DD}-V_{ref}}{R_1 I_S}\right)$$

$$V_{ref} \approx V_T ln\left(\frac{V_{DD}}{R_1 I_S}\right) \text{ (supposed } V_{DD} >> V_{ref}\text{)}$$

$$S_{V_{DD}}^{V_{ref}} = \frac{1}{ln\left(\frac{V_{DD}}{R_1 I_S}\right)}$$

$$\frac{\partial V_{ref}}{\partial T} = \frac{V_{ref}}{T} - V_T\left(\frac{1}{I_S}\frac{\partial I_S}{\partial T} + \frac{1}{R_1}\frac{\partial R_1}{\partial T}\right)$$

$$TC = \frac{V_{ref}}{T} - V_T\left(TC(I_S) - TC(R_1)\right)$$

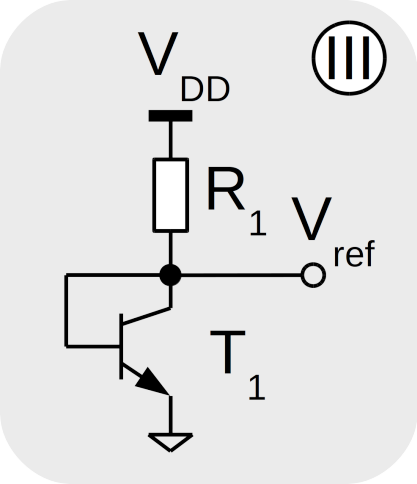

Numbers start to get difficult to compare;

Normally: $\begin{cases} S_{V_{DD}}^{V_{ref}}\Big|_{MOS} > S_{V_{DD}}^{V_{ref}}\Big|_{BJT} \\ TC\Big|_{MOS} < TC\Big|_{BJT} \end{cases}$

Usually sensitibity studies are performed by means of simulation

Simple references

IV. MOS reference

Assuming same current flow to both transistors;

$$V_{ref} = V_{THN} + \frac{V_{DD} - V_{THN} - |V_{THP}|}{\sqrt{\frac{\beta_1}{\beta_2}} + 1}$$

$$S_{V_{DD}}^{V_{ref}} = \frac{V_{DD}}{V_{DD} - V_{THN} + \sqrt{\frac{\beta_1}{\beta_2}} - |V_{THP}|} \approx 1$$

$$TC = \frac{1}{V_{ref}} \frac{1}{\sqrt{\frac{\beta_1}{\beta_2}} + 1} \left[\frac{\partial(-V_{THP})}{\partial T} + \frac{\beta_1}{\beta_2} \frac{\partial V_{THN}}{\partial T} \right]$$

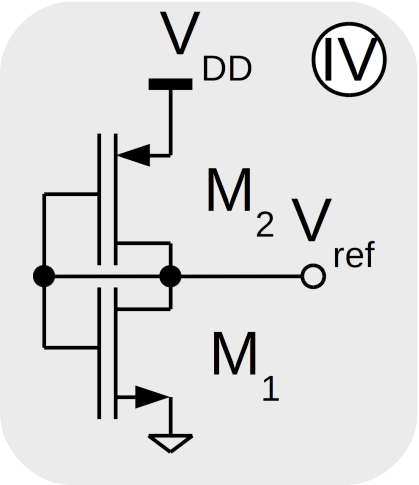

Self biased MOS

Try to avoid V_{DD} dependent output.

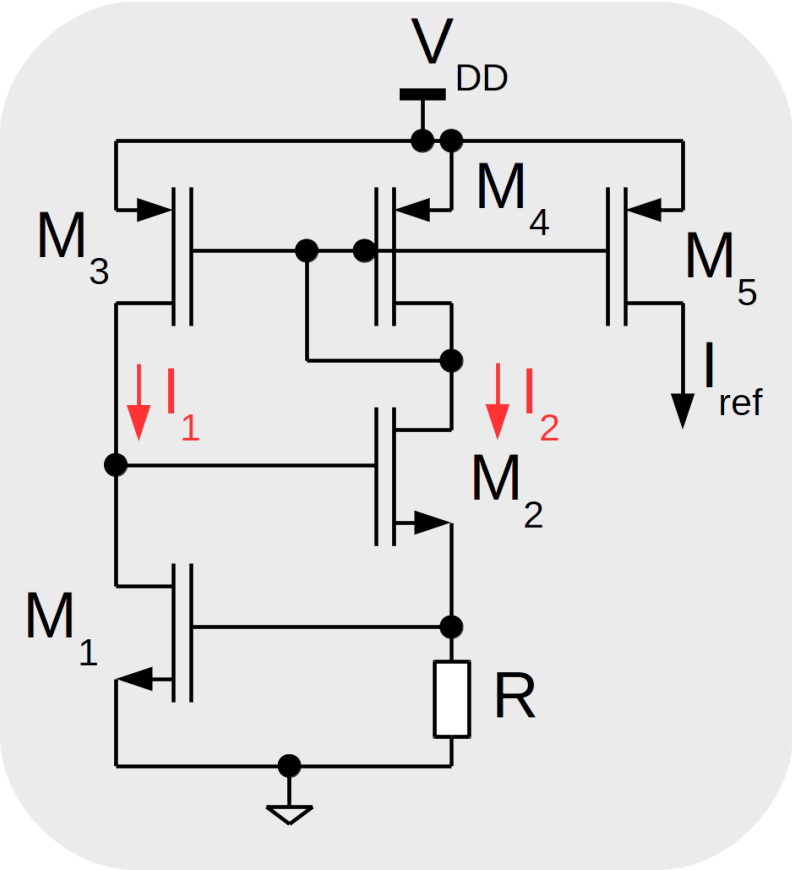

M_3 and M_4 mirrors make $I_1 = I_2$;

$$IR = V_{GSM_1} = V_{THN} + \sqrt{\frac{2I}{\beta_1}}$$

$I_{ref} \approx \frac{V_{THN}}{R}$ for large β

Caution!!

Two operating points:

A No current:
$V_{G_{M3,4}} = V_{DD}$
$V_{G_{M_2}} = 0$

B I_{ref}

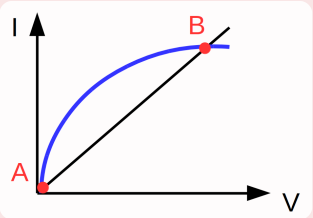

Startup circuit needed!!

Startup

Startup needed to set operation point

When $V_{G_{M_2}}$ goes low M_6 starts to increase current driving operation point to the desired current.

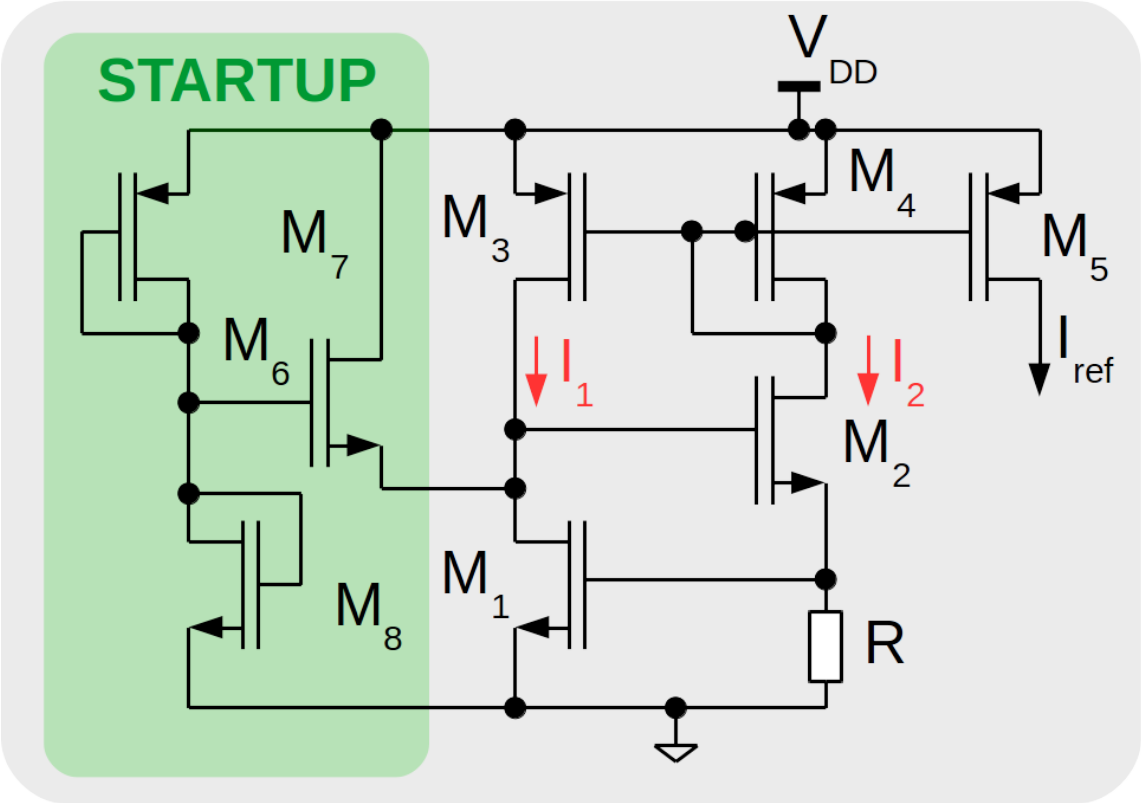

Self biased BJT

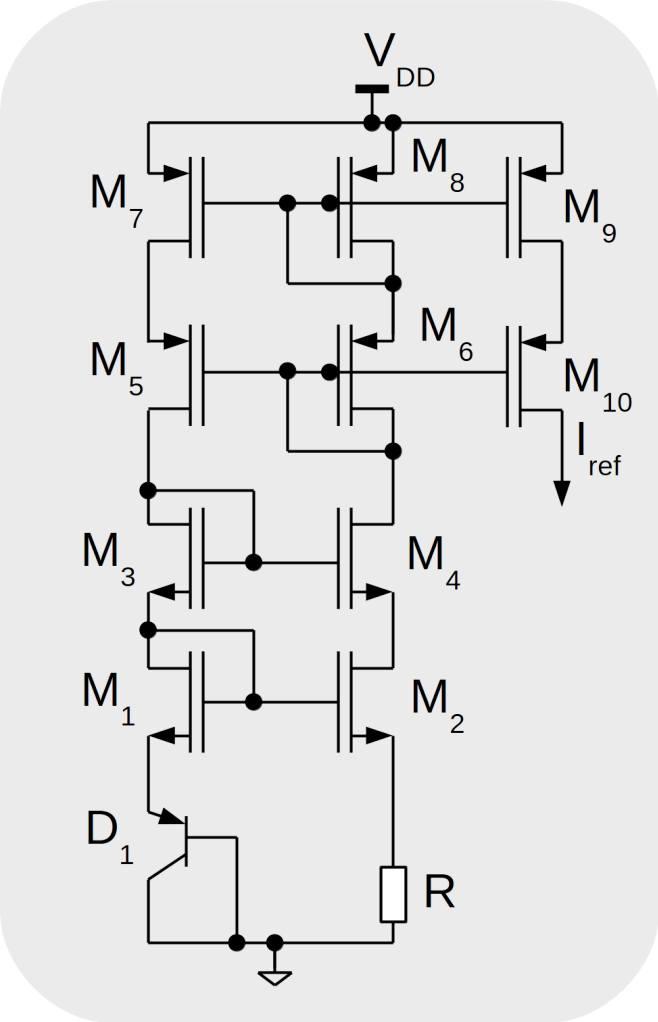

$$I = \frac{V_{D_1}}{R} = I_S e^{\frac{V_{D_1}}{nV_T}}$$

Better matching due to cascode mirrors.

Caution!!

Startup circuit also needed!!

Current references

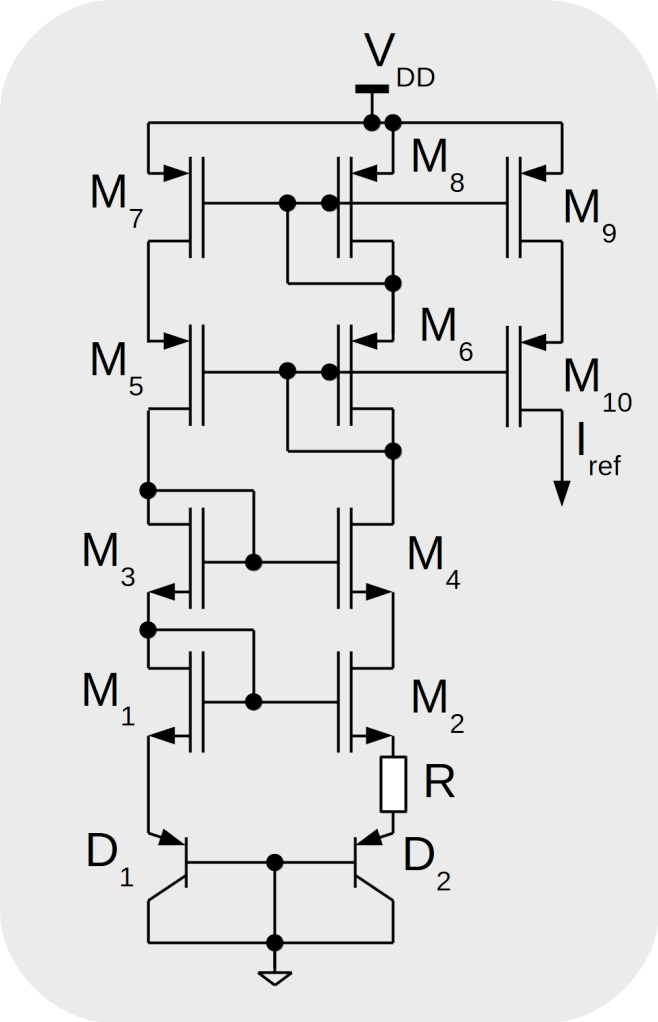

- Mirrors formed by M_1 to M_8 force same current;

$$V_{D_1} = V_{D_2} + I_{D_2} R$$

- Emitter of D_2 is K times D_1;

$$I = \frac{nkln(K)}{qR} = \frac{nV_T}{R} ln(K)$$

Bandgap references

- All previous circuts suffer from temperature dependence.
- Some of previous have **positive** TC while others **negative** TC.

Bandgap reference

Combine both TCs to achieve a common TC = 0.

BJT $\triangle V_{BE}$ variation with temperature;

$$\frac{\partial(\triangle V_{BE})}{\partial T} = \alpha\frac{\partial V_T}{\partial T} = \alpha\frac{\partial}{\partial T}\left(\frac{kT}{q}\right) = \alpha\frac{k}{q} = \alpha 0.085\frac{mV}{^\circ C}$$

Proportional to absolute temperature (PTAT)

Bandgap references

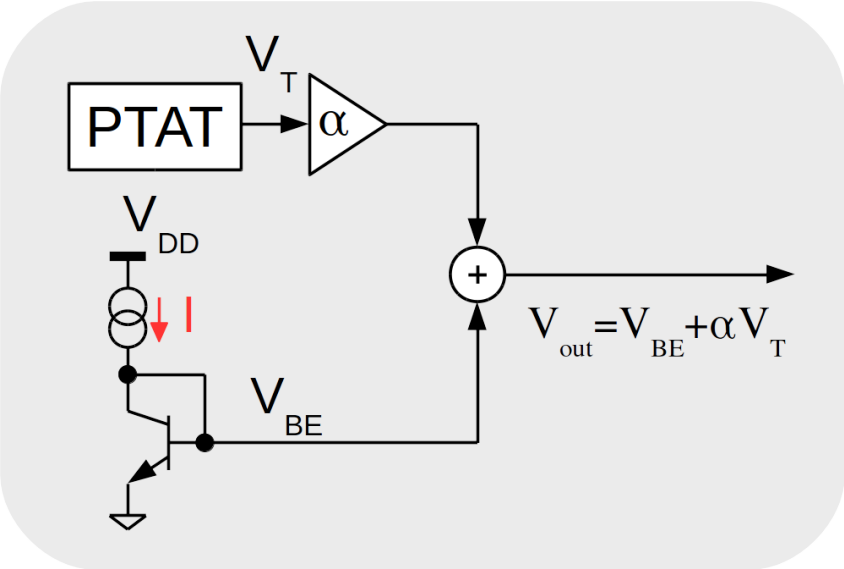

Cancel temperature dependence:

$$\frac{\partial V_{out}}{\partial T} = \frac{\partial V_{BE}}{\partial T} + \alpha \frac{\partial V_T}{\partial T}$$
$$\frac{\partial V_{BE}}{\partial T} = -\alpha \frac{\partial V_T}{\partial T}$$
$$\alpha = \frac{2mV/^{\circ}C}{0.085mV/^{\circ}C} \approx 23.53$$

For $V_T = 26mv@25^{\circ}C$ output is around 1.2V, close to the **silicon band gap voltage**.

Song Bandgap reference

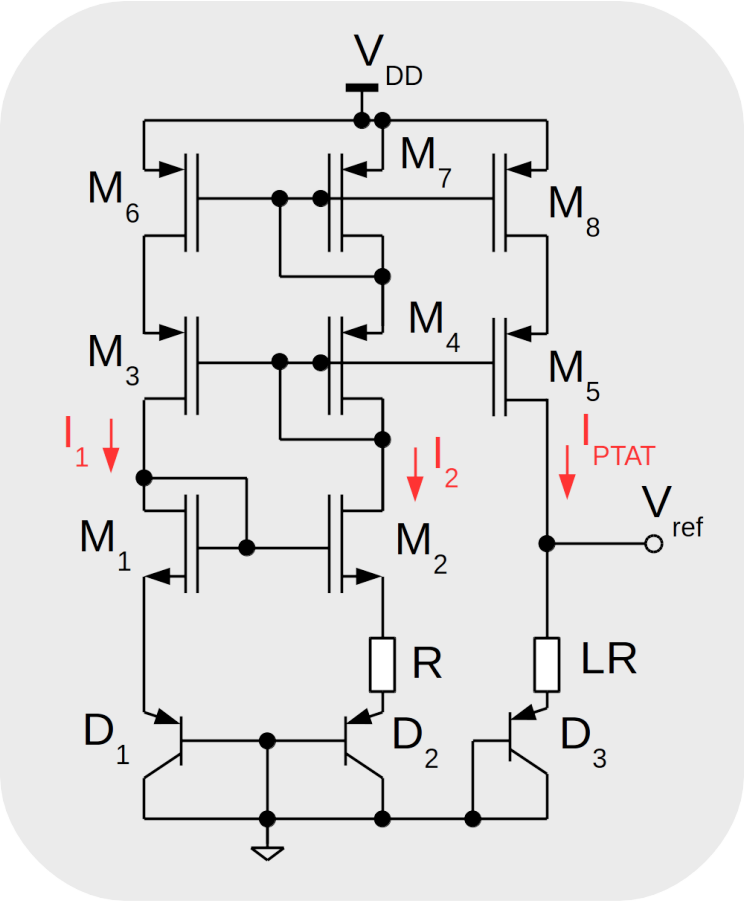

- Currents copied by mirrors;
  $V_{BE_1} = V_{BE_2} + I_{D_2} R$
- PTAT current;
  $I_{PTAT} = I_2 = \frac{V_{BE_1} - V_{BE_2}}{R} = \frac{V_T}{R} ln \left(\frac{I_1}{I_2} \frac{I_{S2}}{I_{S1}} \right)$
- If D_2 is N times larger than D_1;
  $I_{PTAT} = \frac{V_T}{R} lnN$
- Output voltage;
  $V_{ref} = V_{BE_3} + V_T \frac{R_2}{R_1} lnN = V_{BE_3} + \alpha V_T$
- If $R_2 = LR_1$;
  $V_{ref} = V_{BE_3} + V_T LlnN = V_{BE_3} + \alpha V_T$

Brokaw Bandgap reference

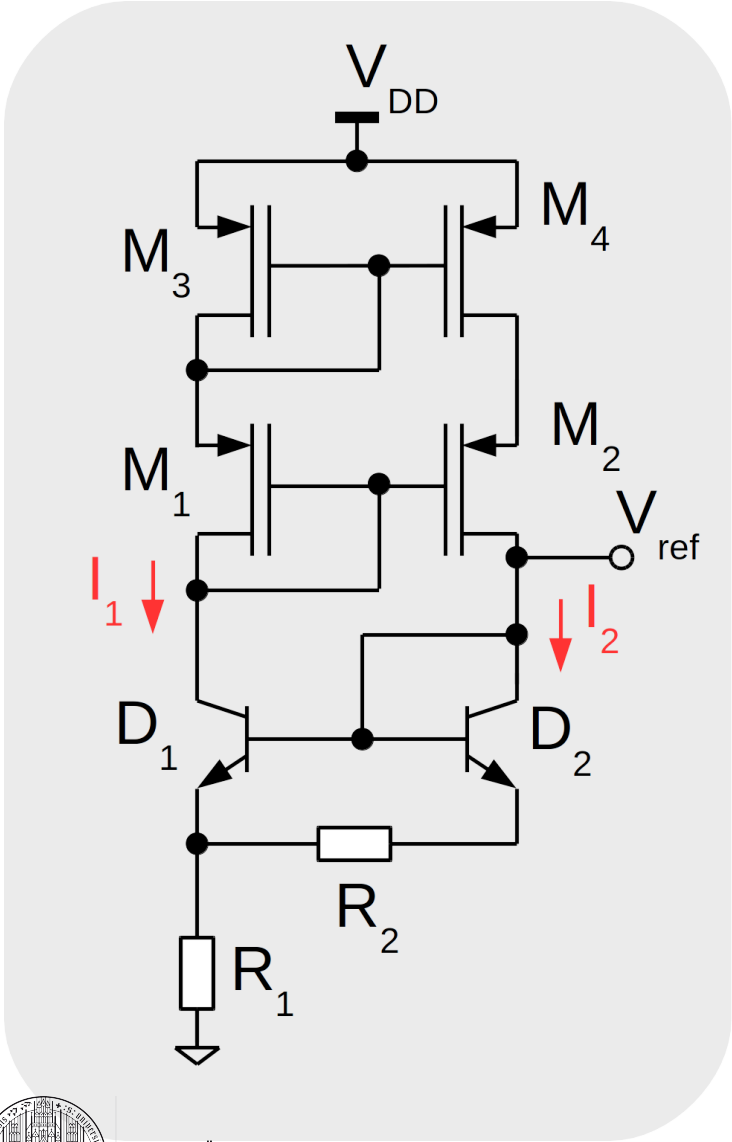

- Currents copied by mirrors;
  $V_{BE_1} = V_{BE_2} + I_{D_2} R$
- PTAT current;
  $I_1 = I_2 = \frac{V_{BE_1} - V_{BE_2}}{R_2} = \frac{V_T}{R_2} ln\left(\frac{I_1}{I_2}\frac{I_{S2}}{I_{S1}}\right) = \frac{V_T}{R} lnN$
- Output voltage;
  $V_{ref} = V_{BE_1} + R_1(I_1 + I_2) = V_{BE_1} + V_T \frac{2R_1}{R_2} lnN = V_{BE_1} + \alpha V_T$

Pure CMOS Bandgap

CMOS technologies usually have only lateral PNP bipolar transistors available.
Usually called sub-bandgap due to lower output voltage.

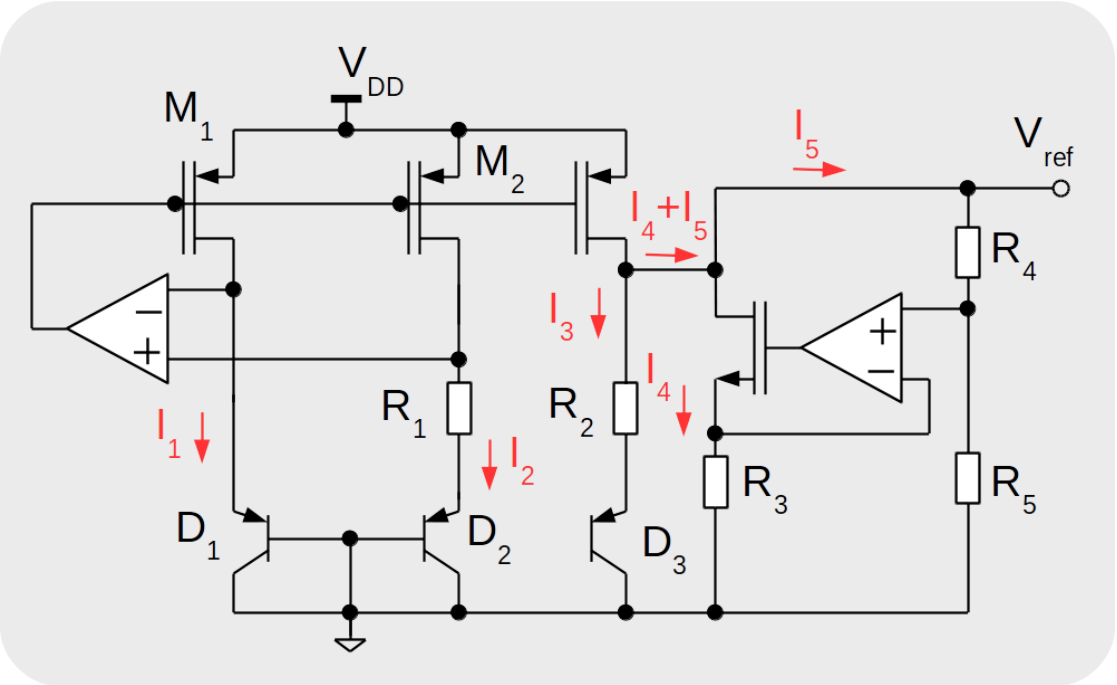

$$V_{EB_1} = V_{EB_2} + I_2 R_1$$
$$I_2 = \frac{V_{EB_1} - V_{EB_2}}{R_1} =$$
$$\frac{V_T}{R_1} ln\left(\frac{I_1}{I_2}\frac{I_{S2}}{I_{S1}}\right) = \frac{V_T}{R_1} lnN$$
$$I_3 = I_2 - I_4 - I_5 =$$
$$I_2 - \frac{V_{ref}}{R_4+R_5} - \frac{V_{ref} R_5}{R_3(R_4+R_5)}$$
$$V_{ref} = V_{EB_3} + I_3 R_2$$
$$V_{ref} = \beta(V_{EB_3} + \alpha V_T)$$

With β independent with temperature and smaller than 1.

Exercise 1: Elements dependence on temperature

On Ex8 library you can find a cellview named Bipolar where you can see a linear effect on temperature.
On the RdivRef check the performance with temperature variation and with power supply variation;

- What is the TC?
- What is the Sensitivity to power supply?

Exercise 2: Bandgap references

With the Song and Brokaw schematics try to tune the parameters to get an acceptable voltage output dependent on temperature;

- What is the TC?
- What is the Sensitivity to power supply?

Exercise 3: CMOS Bandgap reference

Design a sub-bandgap CMOS reference using ideal amplifier *vcvs* from analogLib.

- What is the TC?
- What is the Sensitivity to power supply?