Advanced Analog Building Blocks

UNIVERSITÄT HEIDELBERG
ZUKUNFT SEIT 1386

Prof. Dr. Peter Fischer , Dr. Wei Shen ,

Dr. Albert Comerma, Dr. Johannes Schemmel, etc ...

Topics

UNIVERSITÄT HEIDELBERG
ZUKUNFT SEIT 1386

1. S domain and Laplace Transform Zeros and Poles
2. Basic and Advanced current mirrors
3. Single ended stages
4. Stability
5. Differential stages and 2 stage amplifiers
6. Compensation schemes
7. Low noise preamplifier and shaping
8. Voltage and current references and bandgaps
9. Layout of components, parasitic, corners and MC simulation
10. Standard cells and transistor level digital

www.kip.uni-heidelberg.de/~shen/Advanced_Analog_Building_Blocks/

Advanced Analog Building Blocks

Laplace Transformation & Transfer Function

Wei SHEN (KIP)

Kirchhoff's law and circuit analysis

UNIVERSITÄT HEIDELBERG
ZUKUNFT SEIT 1386

@ every circuit node

$$\sum I = 0$$

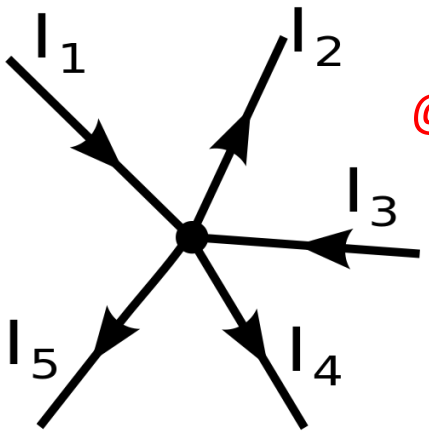

@ every circuit loop

$$\sum U = 0$$

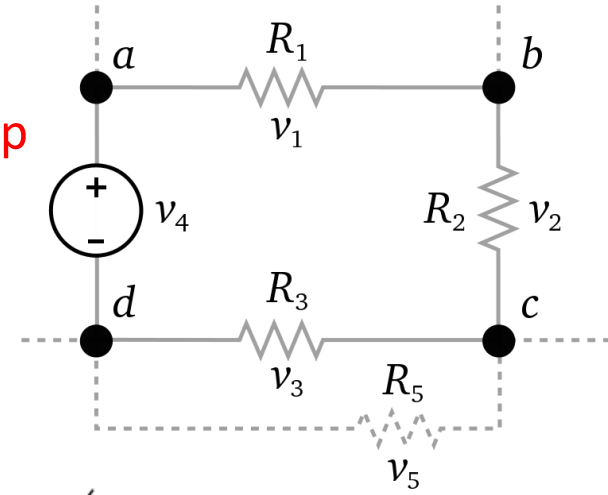

List variables :
variables = # equations

Using Kirchhoff's 1 & 2 Law

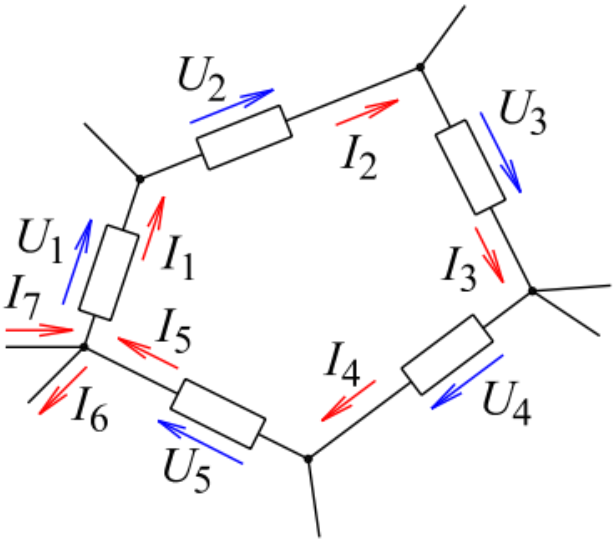

Components ……

Resistor	$I = U/R$
Capacitor	$I = C \cdot dU/dt$
Inductor	$U = L \cdot dI/dt$

Transistor

bipolar

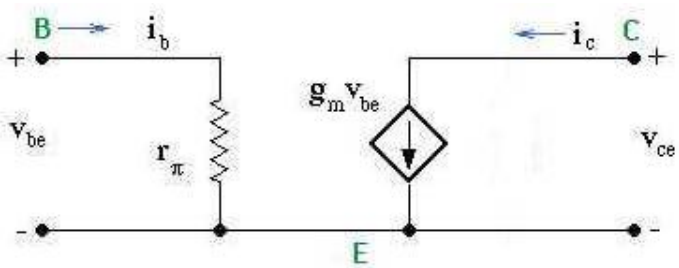

cmos

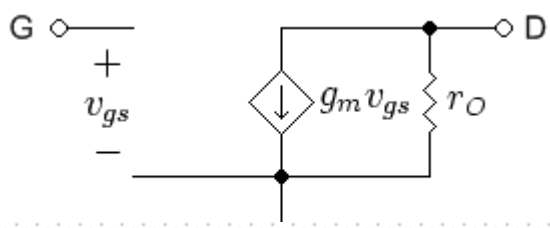

Transformer

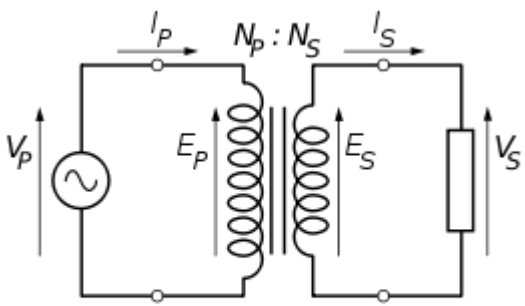

$$\frac{V_P}{V_S} = \frac{I_S}{I_P} = \frac{N_P}{N_S}$$

© Wei SHEN, Universität Heidelberg

Example...

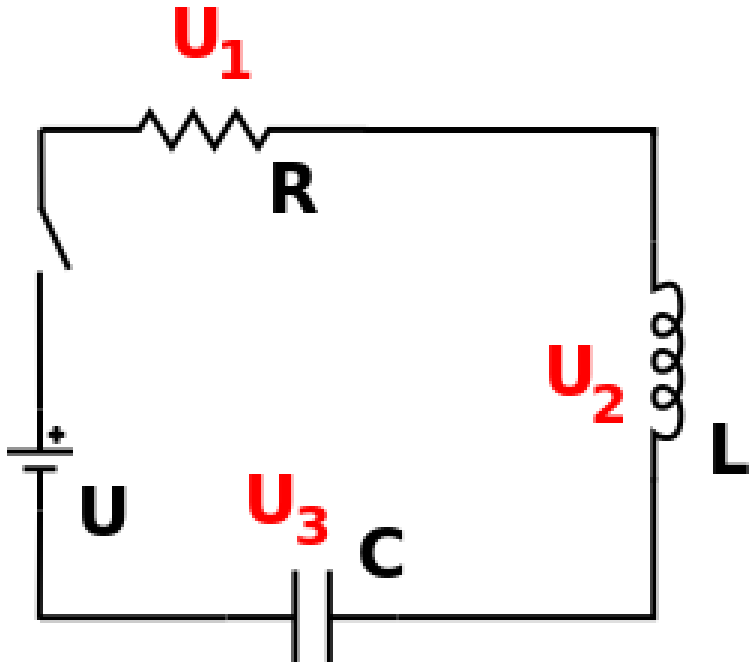

1 loop & 2 nodes

\+ 3 variables (U1, U2 and U3)

$$\begin{cases} U = U_1 + U_2 + U_3 \\ I_R = IC = I_L \end{cases} \Rightarrow \begin{cases} U = U_1 + U_2 \\ \dfrac{U_1}{R} = C\dfrac{dU_2}{dt} = \displaystyle\int_0^t \dfrac{U_3}{L}\,dt \end{cases}$$

Fourier Transformation

$$F(\omega) = \int_{-\infty}^{\infty} f(t)\ e^{-j\cdot\omega t}\ dt$$

- used in Frequency analysis (covered later)

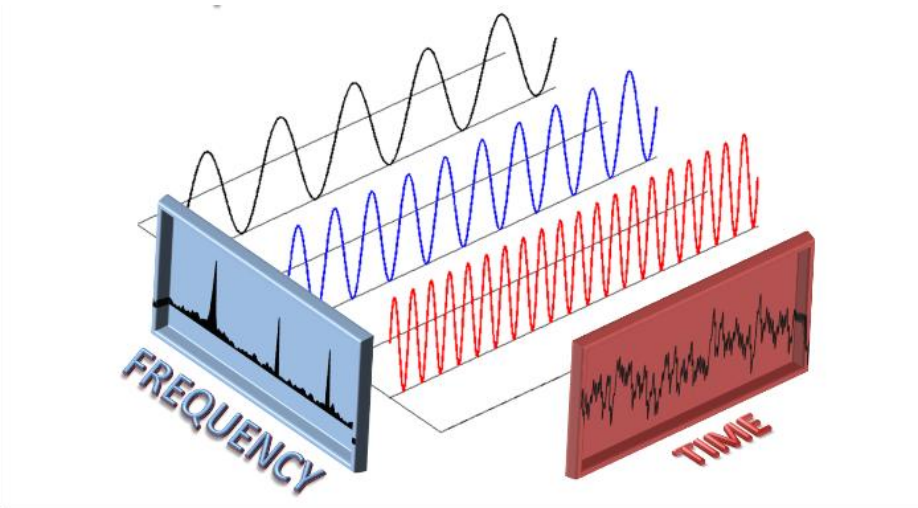

- Concise expressions in derivative and integral
- Concise expression for convolution

Important Properties of FT

UNIVERSITÄT HEIDELBERG
ZUKUNFT SEIT 1386

$f(x)$	$\hat{f}(\nu) = = \int_{-\infty}^{\infty} f(x) e^{-i\nu x}\, dx$
$a \cdot f(x) + b \cdot g(x)$	$a \cdot \hat{f}(\nu) + b \cdot \hat{g}(\nu)$
$f(x-a)$	$e^{-ia\nu} \hat{f}(\nu)$
$f(x) e^{iax}$	$\hat{f}(\nu - a)$
$f(ax)$	$\frac{1}{\lvert a \rvert} \hat{f}\left(\frac{\nu}{a}\right)$
$\hat{f}(x)$	$2\pi f(-\nu)$
$\frac{d^n f(x)}{dx^n}$	$(i\nu)^n \hat{f}(\nu)$
$x^n f(x)$	$i^n \frac{d^n f(\nu)}{d\nu^n}$
$(f * g)(x)$	$\hat{f}(\nu) \hat{g}(\nu)$

Shift in both domains symmetric

Most important for L & C,
if initial value is zero,
For non-zeros, covered later

convolution

$$(f * g)(x) := \int_{\mathbb{R}^n} f(\tau) g(x - \tau) \mathrm{d}\tau$$

In Angular Frequency domain ...

UNIVERSITÄT HEIDELBERG
ZUKUNFT SEIT 1386

capacitor

$$C\frac{dU_2}{dt} = j\,\omega\,C\,U_2$$

inductor

$$\int_0^t \frac{U_2}{L}dt = \frac{U_2}{j\omega L}$$

$$\begin{cases} U = U_1 + U_2 \\ \dfrac{U_1}{R} = C\dfrac{dU_2}{dt} = \displaystyle\int_0^t \frac{U_3}{L}\,dt \end{cases} \Rightarrow \begin{cases} U = U_1 + U_2 \\ \dfrac{U_1}{R} = j\,\omega\,C\,U_2 = \dfrac{U_3}{j\omega L} \end{cases}$$

Solve the equations

$$\begin{cases} U = U_1 + U_2 \\ \dfrac{U_1}{R} = j\,\omega\,C\,U_2 = \dfrac{U_3}{j\omega L} \end{cases}$$

$$U_1 = \frac{j\omega CR}{-\omega^2 LC + j\omega CR + 1} U$$

$$U_2 = \frac{-\omega^2 LC}{-\omega^2 LC + j\omega CR + 1} U$$

$$U_3 = \frac{1}{-\omega^2 LC + j\omega CR + 1} U$$

Mathematical tool is recommended
Later on , we will only focus on U3

Inverse Transform

$$f(t) = \frac{1}{2\pi}\int_{-\infty}^{\infty} F(\omega)\ e^{j\cdot\omega t}\, d\omega$$

If we assume RC > 4L/R and the switch turns on and off for a rather short time (delta function)

$$U_3 = \frac{1}{\sqrt{\frac{1}{LC} - \frac{R^2}{4L^2}}} \exp\left(-\frac{Rt}{2L}\right) * \sin\left(t * \sqrt{\frac{1}{LC} - \frac{R^2}{4L^2}}\right)$$

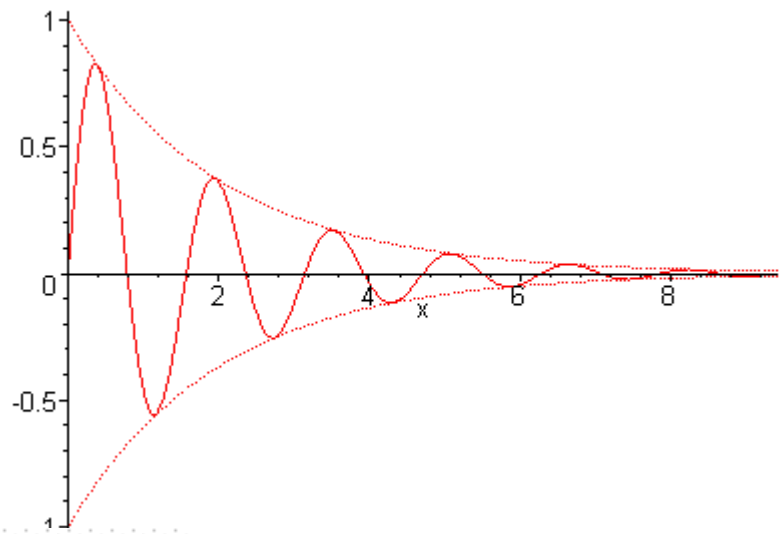

© Wei SHEN, Universität Heidelberg

Laplace Transformation

UNIVERSITÄT HEIDELBERG
ZUKUNFT SEIT 1386

$$X(s) = \int_{-\infty}^{\infty} f(t)\ e^{-s \cdot t}\ \mathrm{dt}$$

same as Fourier Transformation except jω replaced by s
However, mathematically, ……
Not every function in the time domain can be calculated by the Fourier Transformation
e.g. exp(a*t), a > 0,

but calculable in the s domain

$$F(\omega) = \int_{-\infty}^{\infty} f(t)\ e^{-\sigma t}\ e^{-j \cdot \omega t}\ \mathrm{dt}$$

complex frequencies

RoC – Region of Convergence

- the power of decay in $e^{-\sigma t}$

example:

f(t) = exp(-at) u(t) , where u(t) is the step function at t=0

$$L\{f(\mathrm{t})\} = \int_{-\infty}^{\infty} \exp(-\mathrm{at})\mathrm{u}(\mathrm{t})\exp(-\mathrm{st})\mathrm{dt}$$
$$= \int_{0}^{\infty} \exp(-\mathrm{at} - \mathrm{st})\mathrm{dt} = \frac{\exp[-(s+a)t]}{s+a}$$

the transformation only converges when Re(s) > -a, i.e. σ>-a.

Important Properties of LT

Keeps all nice features of FT

since, Laplace is the mentor of Fourier

derivative

inegration

convolution

Property Name	Illustration
Definition	$f(t) \overset{\mathcal{L}}{\leftrightarrow} F(s) \qquad f(t) \overset{\mathcal{L}}{\leftrightarrow} F(s)$ $F(s) = \int_{0^-}^{\infty} f(t)e^{-st}dt \; F(s) = \int_{0^-}^{\infty} f(t)e^{-st}dt$
Linearity	$Af_1(t) + Bf_2(t) \overset{\mathcal{L}}{\leftrightarrow} AF_1(s) + BF_2(s)$
First Derivative	$\frac{df(t)}{dt} \overset{\mathcal{L}}{\leftrightarrow} sF(s) - f(0^-)$
Second Derivative	$\frac{d^2f(t)}{dt^2} \overset{\mathcal{L}}{\leftrightarrow} s^2F(s) - sf(0^-) - \dot{f}(0^-)$
n^{th} Derivative	$\frac{d^nf(t)}{dt^n} \overset{\mathcal{L}}{\leftrightarrow} s^nF(s) - \sum_{i=1}^{n} s^{n-i}f^{(i-1)}(0^-)$
Integration	$\int_0^t f(\lambda)d\lambda \overset{\mathcal{L}}{\leftrightarrow} \frac{1}{s}F(s)$
Multiplication by time	$tf(t) \overset{\mathcal{L}}{\leftrightarrow} -\frac{dF(s)}{ds}$
Time Shift	$f(t-a)\gamma(t-a) \overset{\mathcal{L}}{\leftrightarrow} e^{-as}F(s)$ ($\gamma(t)$ = unit step function)
Complex Shift	$f(t)e^{-at} \overset{\mathcal{L}}{\leftrightarrow} F(s+a)$
Time Scaling	$f\left(\frac{t}{a}\right) \overset{\mathcal{L}}{\leftrightarrow} aF(as)$
Convolution ("*" denotes convolution of functions)	$f_1(t) * f_2(t) \overset{\mathcal{L}}{\leftrightarrow} F_1(s)F_2(s)$
Initial Value Theorem (if F(s) is a strictly proper fraction)	$\lim_{t\to 0^-} f(t) = \lim_{s\to\infty} sF(s)$
Final Value Theorem (if final value exists, e.g., decaying exponentials)	$\lim_{t\to\infty} f(t) = \lim_{s\to 0} sF(s)$

© Wei SHEN, Universität Heidelberg

Inverse Laplace Transformation

UNIVERSITÄT HEIDELBERG
ZUKUNFT SEIT 1386

Fourier Transformation with convergence factor

$$F(\sigma + j\omega) = \int_{-\infty}^{\infty} f(t)\, e^{-\sigma t}\, e^{-j\cdot\omega t}\, dt$$

Fourier Transformation with convergence factor

$$f(t)\, e^{-\sigma t} = \frac{1}{2\pi} \int_{-\infty}^{\infty} F(\sigma + j\omega)\, e^{j\cdot\omega t}\, d\omega$$

Multiply $e^{-\sigma t}$ **on both sides, and take s = σ+jω**

$$f(t) = \frac{1}{2\pi j} \int_{\sigma - j\infty}^{\sigma + j\infty} F(s)\, e^{st}\, ds$$

Inverse Laplace Transformation

UNIVERSITÄT HEIDELBERG
ZUKUNFT SEIT 1386

However, direct calculation using the definitions is difficult (knowledge on complex analysis)

Calculation based on the Residue Theorem (complex analysis)

$$\boldsymbol{f(t)} = \frac{1}{2\pi j}\int_{\sigma-j\infty}^{\sigma+j\infty} \boldsymbol{F(s)\, e^{st}\, ds}$$

$$= \sum_{k=1}^{n} \boldsymbol{Res[F(s)e^{st}, sk], (t > 0)}$$

As f(t) = 0, t<0 for real signals

http://www.staff.city.ac.uk/~george1/laplace_residue.pdf

Residue Theorem for ILT

UNIVERSITÄT HEIDELBERG
ZUKUNFT SEIT 1386

Res(f,c) = $\lim_{s \to c} (s - c) f(s)$ for the first order pole

Res(f,c) = $\lim_{s \to c} \frac{1}{(n-1)!} \frac{d^{n-1}}{ds^{n-1}} [(s - c)^n f(s)]$ for higher orders

Example :

If we assume F(s) = $\frac{5s-1}{(s+1)(s-2)}$, calculate f(t).

f(t) = $\frac{5s-1}{s-2} e^{st}|_{s=-1} + \frac{5s-1}{s+1} e^{st}|_{s=2}$ = 2 e $^{-t}$ + 3e^{2t}

Decomposition

UNIVERSITÄT HEIDELBERG
ZUKUNFT SEIT 1386

Different from the Residue Theorem, decomposition based on the poles

First order :

$$F(s) = \frac{P(s)}{Q(s)} = \frac{P(s)}{(s-a)Q_1(s)} = \frac{A}{s-a} + \frac{P_1(s)}{Q_1(s)}, \quad A = \frac{P(s)}{Q_1(s)}\Big|_{s=a} = \frac{P(a)}{Q_1(a)}$$

and higher orders:

$$F(s) = \frac{P(s)}{Q(s)} = \frac{P(s)}{(s-a)^m Q_2(s)} = \frac{A_0}{(s-a)^m} + \frac{A_1}{(s-a)^{m-1}} + \cdots + \frac{P_2(s)}{Q_2(s)}$$

$$A_0 = \frac{P(a)}{Q_2(a)}, \quad A_k = \frac{1}{k!}\frac{d^k}{ds^k}\left(\frac{P(s)}{Q_{2(s)}}\right)\Big|_{s=a}$$

and complex poles :

$$F(s) = \frac{P(s)}{Q(s)} = \frac{P(s)}{[(s-a)^2+b^2]Q_3(s)} = \frac{C(s-a)+Db}{(s-a)^2+b^2} + \frac{P_3(s)}{Q_3(s)}$$

$$C = \frac{1}{b}\,\mathrm{Im}\left(\frac{P(a+jb)}{Q_3(a+jb)}\right), \quad D = \frac{1}{b}\,\mathrm{Re}\left(\frac{P(a+jb)}{Q_3(a+jb)}\right)$$

Example

$$F(s) = \frac{s^2+2s+1}{(s^2-2s+5)(s-3)}$$, calculate f(t)

$$F(s) = \frac{2}{s-3} - \frac{s-1}{(s-1)^2+2^2} + \frac{2}{(s-1)^2+2^2}$$

Calculate each using Residue Theorem / Table

$f(t) = 2e^{3t} - e^{t}\cos 2t - e^{t}\sin 2t$

Laplace Transformation Table

UNIVERSITÄT HEIDELBERG
ZUKUNFT SEIT 1386

$f(t)=\mathcal{L}^{-1}\{F(s)\}$	$F(s)=\mathcal{L}\{f(t)\}$
1	$\frac{1}{s}$
$t^n, \quad n=1,2,3,\ldots$	$\frac{n!}{s^{n+1}}$
$\sqrt{t}$	$\frac{\sqrt{\pi}}{2s^{\frac{3}{2}}}$
$\sin(at)$	$\frac{a}{s^2+a^2}$
$t\sin(at)$	$\frac{2as}{(s^2+a^2)^2}$
$\sin(at)-at\cos(at)$	$\frac{2a^3}{(s^2+a^2)^2}$
$\cos(at)-at\sin(at)$	$\frac{s(s^2-a^2)}{(s^2+a^2)^2}$
$\sin(at+b)$	$\frac{s\sin(b)+a\cos(b)}{s^2+a^2}$
$\sinh(at)$	$\frac{a}{s^2-a^2}$
$\mathrm{e}^{at}\sin(bt)$	$\frac{b}{(s-a)^2+b^2}$
$\mathrm{e}^{at}\sinh(bt)$	$\frac{b}{(s-a)^2-b^2}$
$t^n\mathrm{e}^{at}, \quad n=1,2,3,\ldots$	$\frac{n!}{(s-a)^{n+1}}$

$f(t)=\mathcal{L}^{-1}\{F(s)\}$	$F(s)=\mathcal{L}\{f(t)\}$
e^{at}	$\frac{1}{s-a}$
$t^p, p>-1$	$\frac{\Gamma(p+1)}{s^{p+1}}$
$t^{n-\frac{1}{2}}, \quad n=1,2,3,\ldots$	$\frac{1\cdot3\cdot5\cdots(2n-1)\sqrt{\pi}}{2^n s^{n+\frac{1}{2}}}$
$\cos(at)$	$\frac{s}{s^2+a^2}$
$t\cos(at)$	$\frac{s^2-a^2}{(s^2+a^2)^2}$
$\sin(at)+at\cos(at)$	$\frac{2as^2}{(s^2+a^2)^2}$
$\cos(at)+at\sin(at)$	$\frac{s(s^2+3a^2)}{(s^2+a^2)^2}$
$\cos(at+b)$	$\frac{s\cos(b)-a\sin(b)}{s^2+a^2}$
$\cosh(at)$	$\frac{s}{s^2-a^2}$
$\mathrm{e}^{at}\cos(bt)$	$\frac{s-a}{(s-a)^2+b^2}$
$\mathrm{e}^{at}\cosh(bt)$	$\frac{s-a}{(s-a)^2-b^2}$
$f(ct)$	$\frac{1}{c}F\left(\frac{s}{c}\right)$

Laplace transformed equations

UNIVERSITÄT HEIDELBERG
ZUKUNFT SEIT 1386

$$\begin{cases} U = U_1 + U_2 \\ \dfrac{U_1}{R} = j\,\omega\,C\,U_2 = \dfrac{U_3}{j\omega L} \end{cases} \Rightarrow \begin{cases} U = U_1 + U_2 \\ \dfrac{U_1}{R} = sC\,U_2 = \dfrac{U_3}{sL} \end{cases}$$

$$U_1 = \frac{sCR}{s^2LC + sCR + 1}\,U$$

$$U_2 = \frac{s^2LC}{s^2LC + sCR + 1}\,U$$

$$U_3 = \frac{1}{s^2LC + sCR + 1}\,U$$

$\sin(at+b)$	$\dfrac{s\sin(b)+a\cos(b)}{s^2+a^2}$
$\sinh(at)$	$\dfrac{a}{s^2-a^2}$
$\mathrm{e}^{at}\sin(bt)$	$\dfrac{b}{(s-a)^2+b^2}$
$\mathrm{e}^{at}\sinh(bt)$	$\dfrac{b}{(s-a)^2-b^2}$
$t^n\mathrm{e}^{at},\quad n=1,2,3,\ldots$	$\dfrac{n!}{(s-a)^{n+1}}$

© Wei SHEN, Universität Heidelberg

When to use what transformation?

UNIVERSITÄT HEIDELBERG
ZUKUNFT SEIT 1386

- Laplace : circuit analysis, when oscillation is possible, no convergence required,

- Fourier : frequency analysis, check out poles, zeros, stability, compensation schemes, phase margin etc...

- Procedures: first use Laplace to get the expression, then replace s by jω to get the frequency plot

Components in the s domain

	time domain	s domain
Capacitor	$I = C \cdot dU/dt$	$sC \cdot U$
Inductor	$U = L \cdot dI/dt$	$sL \cdot I$

Capacitor and inductor can be treated same as resistor in the s domain, except with the impedance 1/sC and sL .

The two Kirchhoff's Law can be applied in the s domain taking these models

NO DIFFERENTIAL EQUATIONS NEEDED

initial value often zero

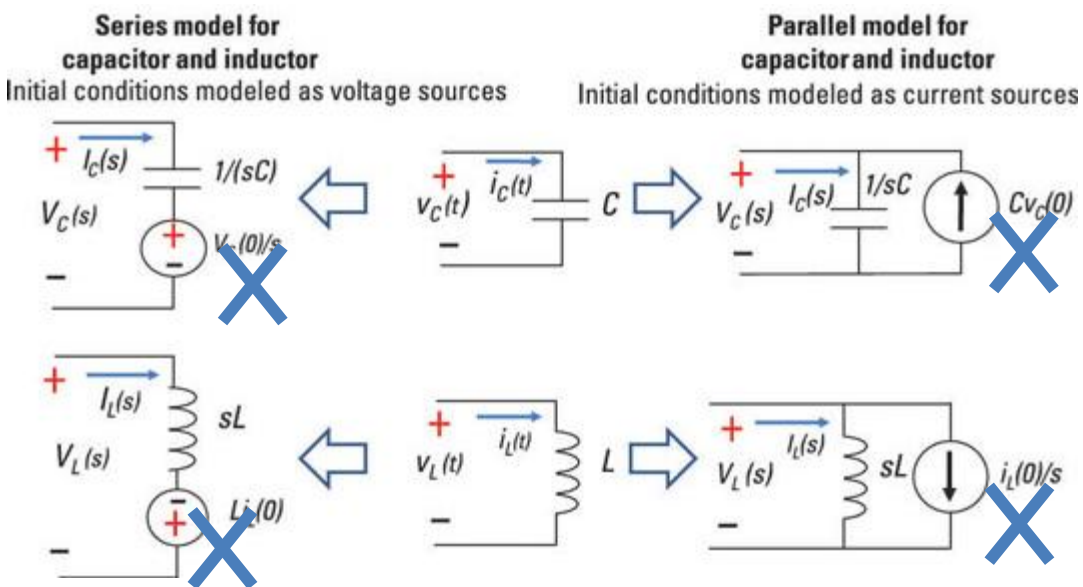

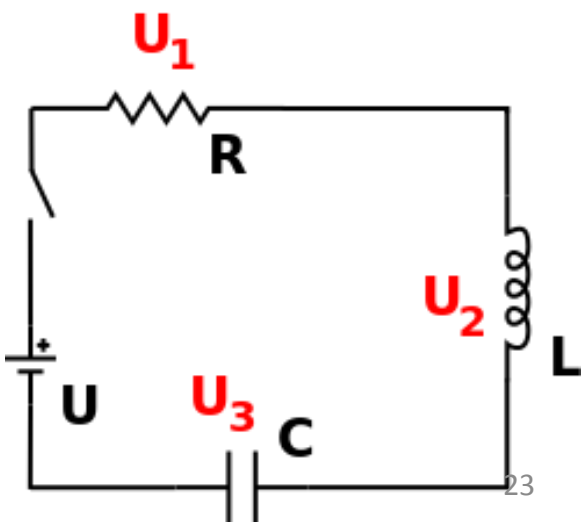

Voltage Division

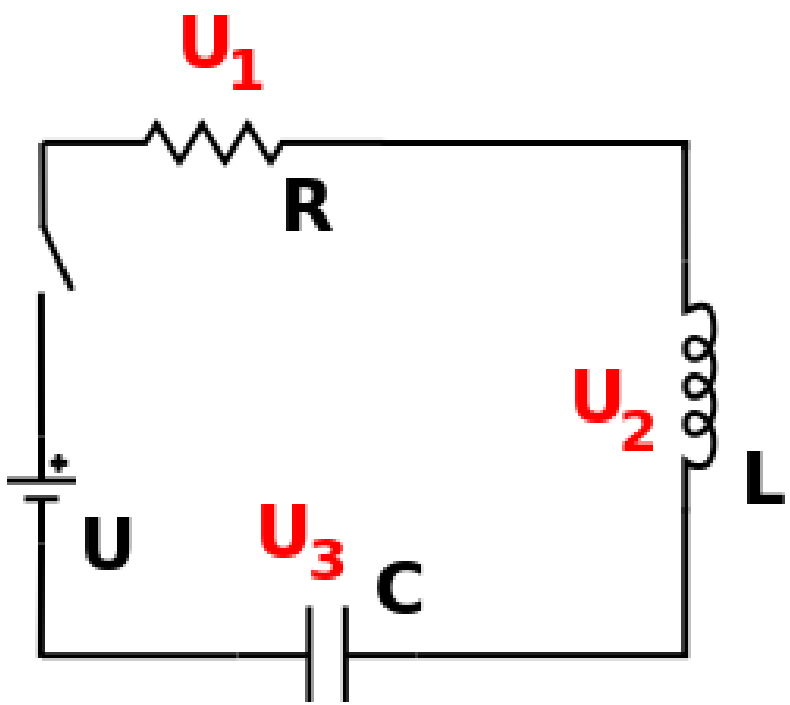

$$U_1 = \frac{sCR}{s^2LC+sCR+1}U$$

$$U_2 = \frac{s^2LC}{s^2LC+sCR+1}U$$

$$U_3 = \frac{1}{s^2LC+sCR+1}U$$

$$U_3 = \frac{1/SC}{R+sL+1/SC}U = \frac{1}{s^2LC+sCR+1}U$$

© Wei SHEN, Universität Heidelberg

Transfer Function

Transfer function

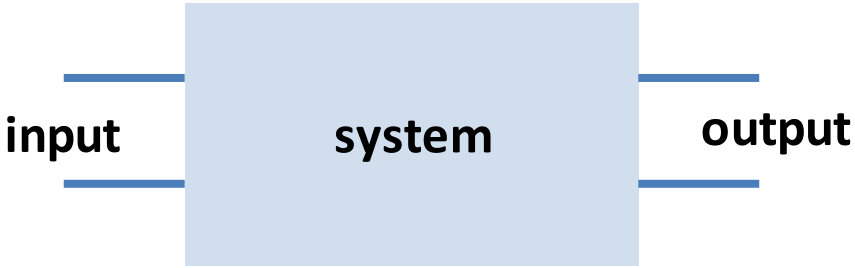

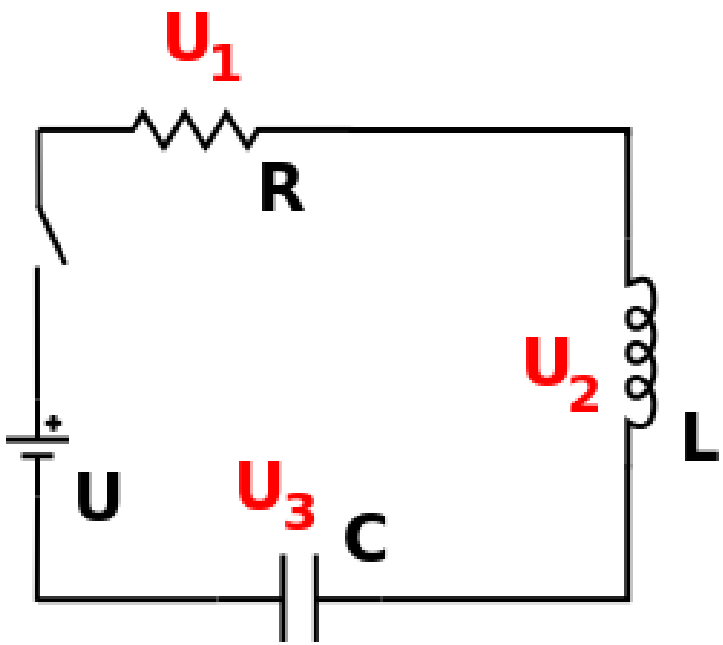

- Transfer function

$$\frac{A_{output}}{A_{input}}$$ (A can be any electrical quantity)

Linear System

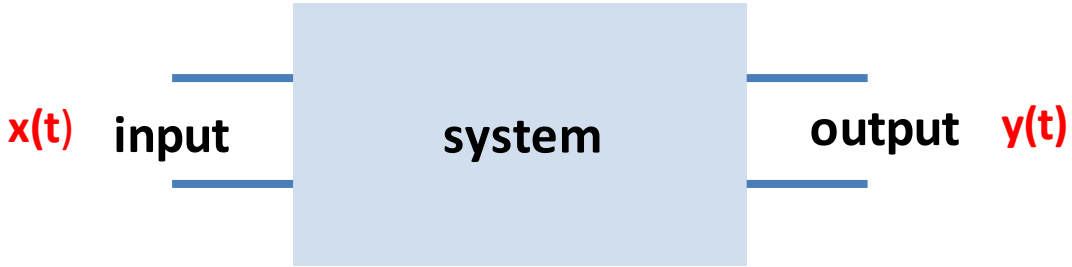

the system can be treated as an operator H, which converts x(t) to y(t)

$$y(t) = H\,[x(t)]$$

and follows the linear relation

$$\alpha\, y_1(t) + \beta\, y_2(t) = H\,[\alpha\, x_1(t) + \beta\, x_2(t)]$$

Impulse Response

UNIVERSITÄT HEIDELBERG
ZUKUNFT SEIT 1386

H is difficult to calculate, it is easier to first calculate the response by sending an impulse at the input. The impulse is a delta function δ(t).

the output is defined as the **impulse response** of the system in the time domain, h(t)

$$h(t) = H\,[\delta(t)]$$

Other inputs are often used, if the input is a step funciton, the output is defined as the step response of the system. The most important is the impulse response.

Convolution

UNIVERSITÄT HEIDELBERG
ZUKUNFT SEIT 1386

For an arbitrary input waveform

$$x(t) = \int_0^\infty x(\tau)\, \delta(t-\tau)\, d\tau$$

can be interpreted as a sum of different delta functions δ(t – τ) with amplitude x(τ), the impulse response for δ(t – τ) is h(t – τ)

by using the linear property of the system, x(τ)as the coefficient of δ(t – τ)

$$y(t) = H[x(t)] = \int_0^\infty x(\tau)\, H[\delta(t-\tau)]\, d\tau$$

$$= \int_0^\infty x(\tau)\, h(t-\tau)\, d\tau$$

For an arbitrary waveform input, the output is the convolution of the input signal and the impulse response of the system

Why we need transfer function

- signal transferred by using the convolution in the time domain, but multiplying in the s domain

Convolution ("*" denotes convolution of functions)	$f_1(t) * f_2(t) \overset{\mathcal{L}}{\leftrightarrow} F_1(s)F_2(s)$

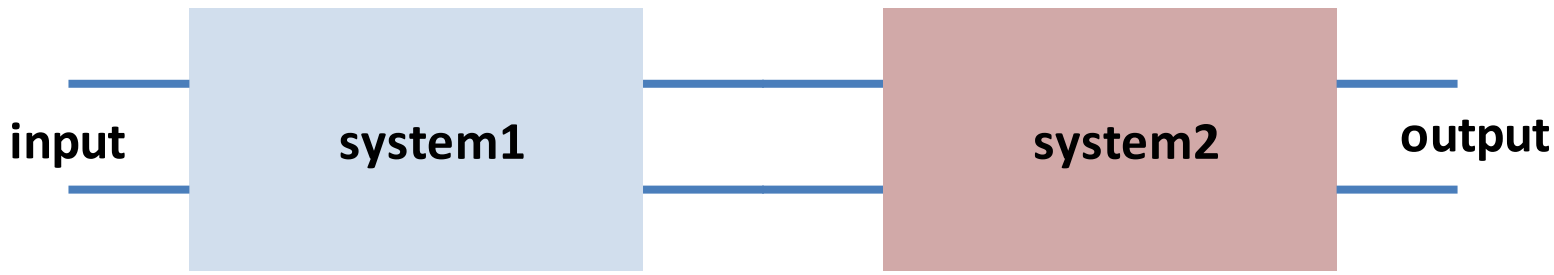

- easier for cascading the processing systems

$$H(s) = H_1(s) \cdot H_2(s)$$

© Wei SHEN, Universität Heidelberg

Noise Transfer

UNIVERSITÄT HEIDELBERG
ZUKUNFT SEIT 1386

noise inside the circuit is a random process which has no clear definition for the polarity of the corresponding current and voltage, it is always expressed and treated in terms of noise power

$$P = \sigma^2{}_v = \int_0^\infty s(\omega)d\omega$$

Mean square of noise voltage equals power.

s(ω) is called power spectral density, usually is predicted by different noise theories. e.g. $s_R(\omega) = 4kTR$ for resistor

The transfer function for the noise power is

$$s_o(\omega) = |H(\omega)|^2 \cdot s_i(\omega)$$

H(ω) is the Laplace form of the transfer function replacing s by jω, and then taking the Norm (Absolut value)

verify ……

the average power in period T : $\overline{P_T} = \frac{1}{T}\int_{-T/2}^{T/2} v^2{}_T\, dt$

If T → ∞, $\overline{P_T}$ → $\bar{P}$, by using Paserval's Theorem

$$\bar{P} = \boldsymbol{\sigma}^{\mathbf{2}}{}_{\boldsymbol{v}} \stackrel{\text{def}}{=} \lim_{T\to\infty}\frac{1}{T}\int_{-T/2}^{T/2} v^2{}_T\, dt = \lim_{T\to\infty}\frac{1}{T}\int_{-\infty}^{\infty} |V_T(\omega)|^2\, d\omega$$

By definition from last slide, s(ω) = $\lim_{T\to\infty}\frac{1}{T}|V_T(\omega)|^2$.

$$\mathbf{s_o(\omega) = } = \lim_{T\to\infty}\frac{1}{T}|V_o(\omega)|^2 = \lim_{T\to\infty}\frac{1}{T}|v_{i(\omega)}H(\omega)|^2 = \mathbf{|H(\omega)|2 \cdot si(\omega)}$$

Zeros and Poles

© Wei SHEN, Universität Heidelberg

Poles and Zeros

$$H(s) = \frac{b_m s^m + bm_{-1} s^{m-1} + \cdots + b_0}{a_n s^n + an_{-1} s^{n-1} + \cdots + a_0} = \frac{b_m (s-z_1)(s-z_2)\ldots(s-zm)}{a_n (s-p_1)(s-p_2)\ldots(s-pn)}$$

Real coefficients, complex poles/zeros appear with conjugates

6 types of poles :

- **Null** > **X(s)/s** ↔ $\int_0^t x(\tau)\,d\tau$
- **a positive real number** > **1/(s+a)** ↔ **exp (-a·t)**
- **a negative real number (diverge)**
- **imaginary conjugates (a=0, diverge)** > **$b/[(s+a)^2+b^2]$** ↔ **exp(-a·t) sin(bt)**
- **a complex conjugate with a positive real part (a>0, converge)**
- **a complex conjugate with a negative real part (a<0, diverge)**

In order for the waveform to converge in the time domain, a must be positive, poles have to be on the left half complex plane, otherwise oscillation in the circuit

Poles and Zeros

$sX(s) - x(0) \quad \leftrightarrow \quad dx/dt$

Zeros are usually real numbers, they can be treated as adding an additional timing derivative to the original function in the time domain.

Similarly, adding a pole with large time constant approximates adding an integration stage to the circuit

Frequency response of a signal/transfer function

UNIVERSITÄT HEIDELBERG
ZUKUNFT SEIT 1386

- The frequency plot can be generated by the transfer function in the s domain.
- jω replaces s in the expression.
- Take the Norm of the expression and then express in dB
- This type of frequency response is called Bode Plot

Bode Plot

- real zeros
- zeros with complex conjugates
- real poles
- poles with complex conjugates

http://lpsa.swarthmore.edu/Bode/Bode.html

Term	Magnitude	Phase
Constant: K	$20\log_{10}(\lvert K\rvert)$	K>0: 0° K<0: ±180°
Pole at Origin (Integrator) $\frac{1}{s}$	-20 dB/decade passing through 0 dB at ω=1	-90°
Zero at Origin (Differentiator) s	+20 dB/decade passing through 0 dB at ω=1 *(Mirror image of Integrator about 0 dB)*	+90° *(Mirror image of Integrator about 0°)*
Real Pole $\frac{1}{\frac{s}{\omega_0}+1}$	1. Draw low frequency asymptote at 0 dB 2. Draw high frequency asymptote at -20 dB/decade 3. Connect lines at ω_0.	1. Draw low frequency asymptote at 0° 2. Draw high frequency asymptote at -90° 3. Connect with a straight line from $0.1\cdot\omega_0$ to $10\cdot\omega_0$
Real Zero $\frac{s}{\omega_0}+1$	1. Draw low frequency asymptote at 0 dB 2. Draw high frequency asymptote at +20 dB/decade 3. Connect lines at ω_0. *(Mirror image of Real Pole about 0 dB)*	1. Draw low frequency asymptote at 0° 2. Draw high frequency asymptote at +90° 3. Connect with a straight line from $0.1\cdot\omega_0$ to $10\cdot\omega_0$ *(Mirror image of Real Pole about 0°)*
Underdamped Poles (Complex conjugate poles) $\frac{1}{\left(\frac{s}{\omega_0}\right)^2+2\zeta\left(\frac{s}{\omega_0}\right)+1}$, $0<\zeta<1$	1. Draw low frequency asymptote at 0 dB 2. Draw high frequency asymptote at -40 dB/decade 3. If ζ<0.5, then draw peak at ω_0 with amplitude $\lvert H(j\omega_0)\rvert=-20\cdot\log_{10}(2\zeta)$, else don't draw peak 4. Connect lines	1. Draw low frequency asymptote at 0° 2. Draw high frequency asymptote at -180° 3. Connect with straight line from $\omega=\frac{\omega_0}{10^{\zeta}}$ to $\omega_0\cdot 10^{\zeta}$ *You can also look in a textbook for examples*
Underdamped Zeros (Complex conjugate zeros) $\left(\frac{s}{\omega_0}\right)^2+2\zeta\left(\frac{s}{\omega_0}\right)+1$ $0<\zeta<1$	1. Draw low frequency asymptote at 0 dB 2. Draw high frequency asymptote at +40 dB/decade 3. If ζ<0.5, then draw peak at ω_0 with amplitude $\lvert H(j\omega_0)\rvert=+20\cdot\log_{10}(2\zeta)$, else don't draw peak 4. Connect lines *(Mirror image of Underdamped Pole about 0 dB)*	1. Draw low frequency asymptote at 0° 2. Draw high frequency asymptote at +180° 3. Connect with straight line from $\omega=\frac{\omega_0}{10^{\zeta}}$ to $\omega_0\cdot 10^{\zeta}$ *You can also look in a textbook for examples.* *(Mirror image of Underdamped Pole about 0°)*